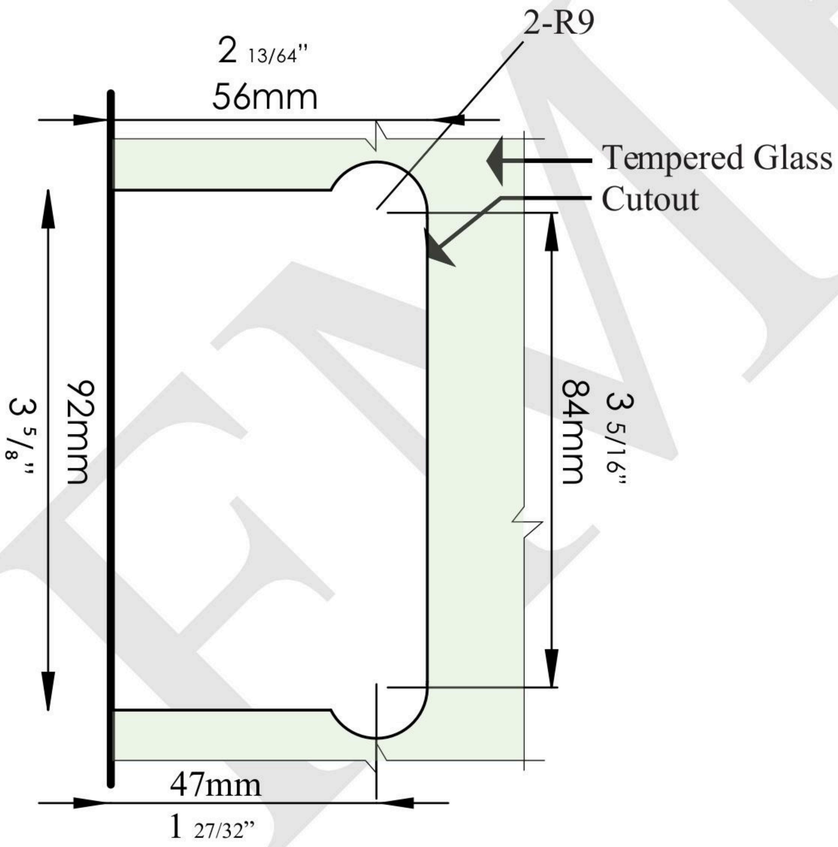

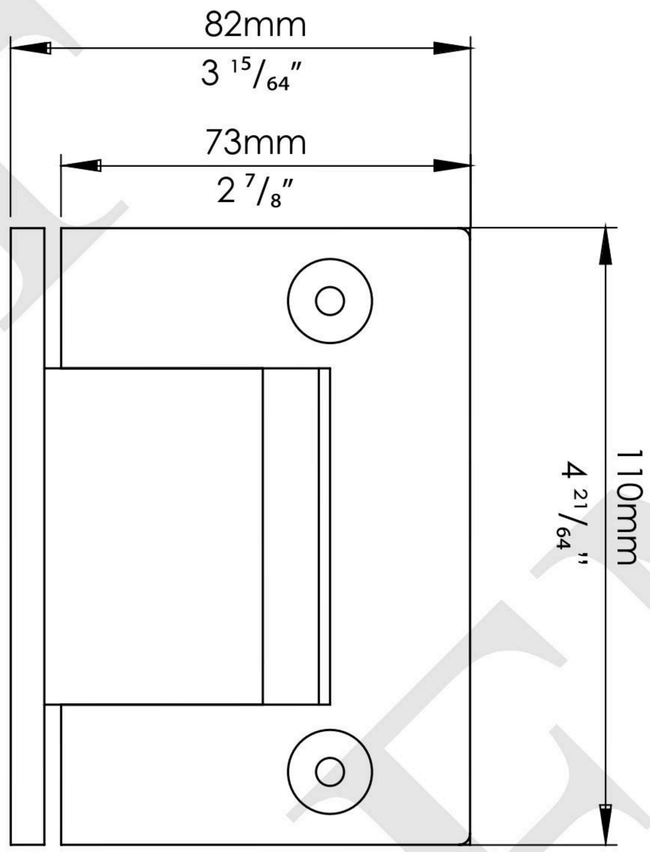

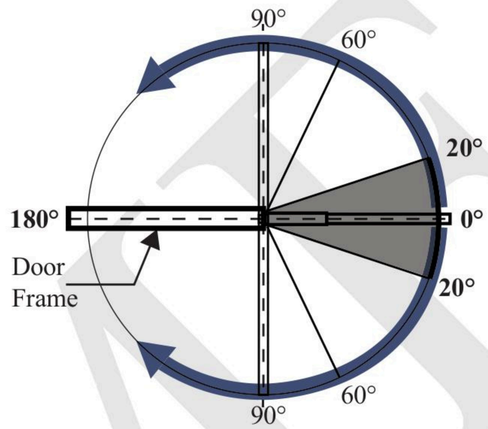

Features:

1. Soft Closing- 20°-0° (adjust by valve 2)
2. Soft Closing- 60°-20° (adjust by valve 1)
3. Fast Closing- 90°- 60°
4. HO (Hold open: 95°- 90°)

Model	Overall dimension (mm)	Max. load capacity (kg)	Glass Thickness (mm)	Gasket usage
HYP-205	82x110x26	60	10mm	4
			12mm	2

NOTES:

- PROPRIETARY AND CONFIDENTIAL
-THE INFORMATION CONTAINED IN THIS DRAWING IS THE SOLE PROPERTY OF FMF GLASS HARDWARE. ANY REPRODUCTION IN PART OR AS A WHOLE WITHOUT THE WRITTEN PERMISSION OF FMF GLASS HARDWARE IS PROHIBITED.

PRODUCT NAME: 90° Hydraulic Wall-Mount Hinge

PRODUCT MODEL NUMBER: HYP-205

DWG NO. HYP-205 _

UNIT: MM

DATE: 01.22

DRAWN BY: FMF

DWG SIZE/SCALE A4/NTS

FMF GLASS HARDWARE

REV. 1

SHEET 1 OF 1