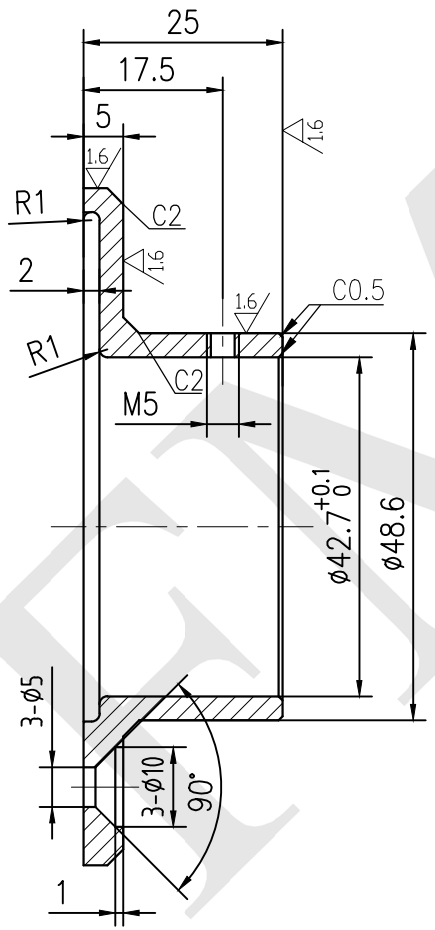

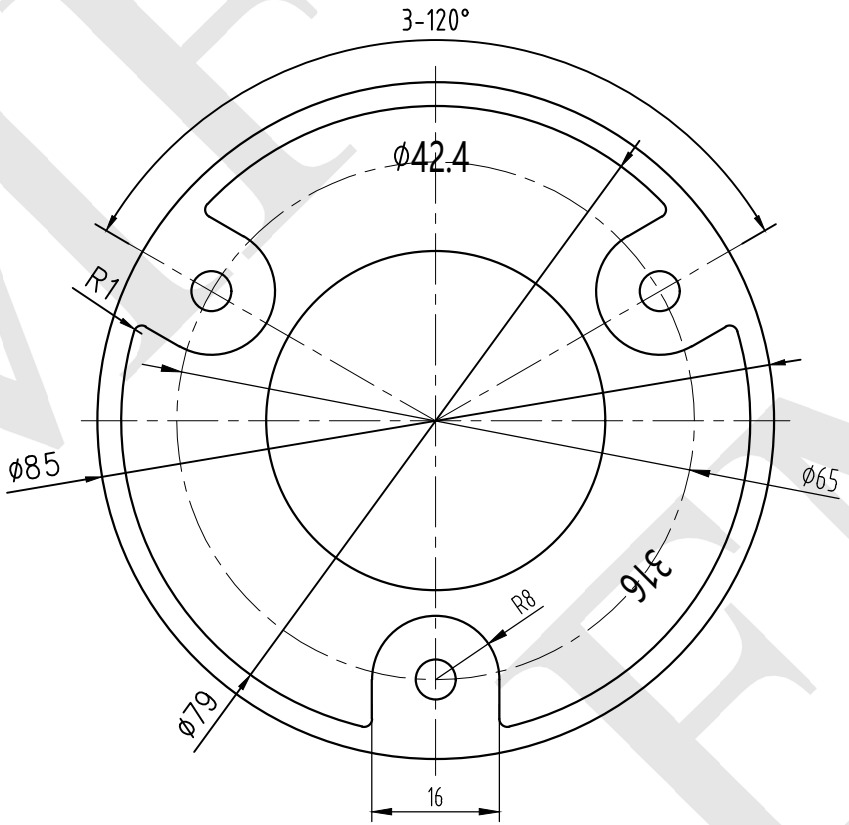

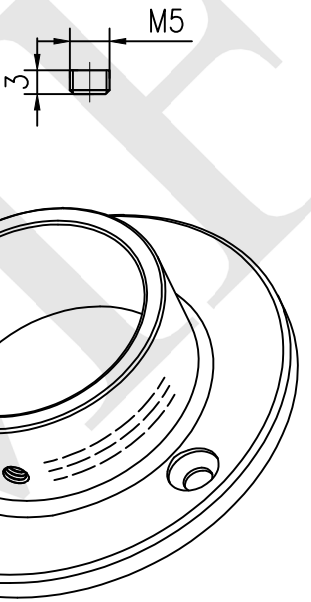

NOTES:

- PROPRIETARY AND CONFIDENTIAL
-THE INFORMATION CONTAINED IN THIS DRAWING IS THE SOLE PROPERTY OF FMF GLASS HARDWARE. ANY REPRODUCTION IN PART OR AS A WHOLE WITHOUT THE WRITTEN PERMISSION OF FMF GLASS HARDWARE IS PROHIBITED.

PRODUCT NAME: Flange Disc for Round Handrail		PRODUCT MODEL NUMBER: DIS-424	
DWG NO. DIS-424_1	UNIT: MM	DWG SIZE/SCALE A4/NTS	REV. 1
DATE: 10.22	DRAWN BY: FMF	FMF GLASS HARDWARE	SHEET 1 OF 1