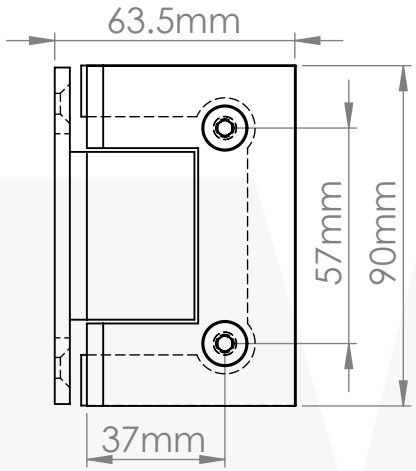

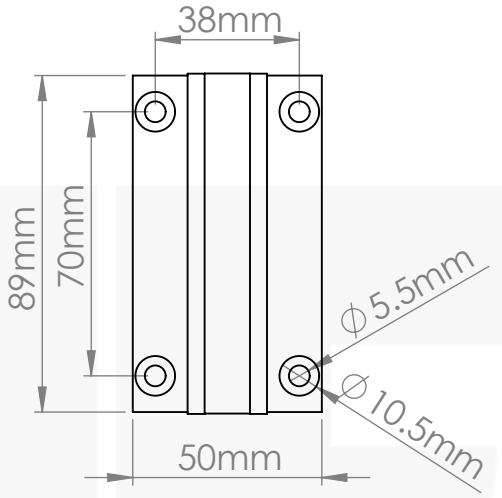

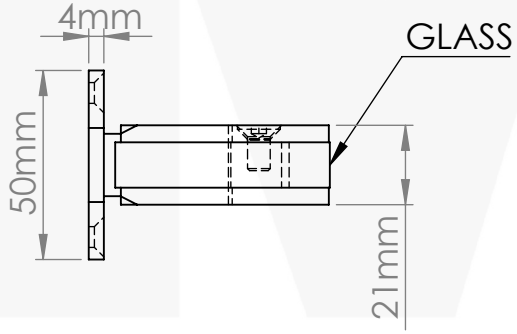

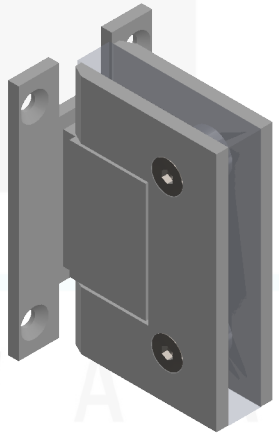

Specifications:

Glass Sizes: 3/8" (10mm) to 1/2" (12mm) thick tempered safety glass

Construction: Solid brass

Closing Type: Self-centering when within 15˚ of closed position

Cutout Required

Includes: Gaskets, screws and template

*Maximum Door Capacities	3/8" (10mm) Glass Weight Width	1/2" (12mm) Glass Weight Width
Using 2 Hinges Using 3 Hinges	80 lbs.(36 kg) 28"(711mm) 120 lbs.(54 kg) 32"(813mm)	80 lbs.(36 kg) 28"(711mm) 120 lbs.(54 kg) 32"(813mm)

PROPRIETARY AND CONFIDENTIAL

THE INFORMATION CONTAINED IN THIS DRAWING IS THE SOLE PROPERTY OF **FMF GLASS HARDWARE.** ANY REPRODUCTION IN PART OR AS A WHOLE WITHOUT THE WRITTEN PERMISSION OF **FMF GLASS HARDWARE** IS PROHIBITED.

FMF GLASS HARDWARE

REV.

PRODUCT: G200

THIRD ANGLE PROJECTION

DATE:	DRAWING CHECK.	DWG SIZE/SCALE A4 nts	DWG NO.	SHEET 1 OF 1
DRAWN:	CLIENT APPROVED:			